For a Free Quote:
Web: **EnergyPal.com/solar**
Call: **1-800-990-3725**
Email: **contact@energypal.com**

Solar Panel Guide
Specification Data Sheet

Qingdao Jiaoyang Lamps Co., Ltd.
Poly 70W
70W

Also available on the web at
EnergyPal.com/qingdao-jiaoyang-lamps-co-ltd-solar-panels/70w

SOLAR PANEL

PRODUCT SPECIFICATIONS

Dimension	1014×515×30-25mm
Weight	6KG
Peak power	70W
Power tolerance	±5%Pm
Max power voltage	17.08V
Max power current	4.098A
Open circuit voltage	20.667V
Short circuit current	4.426A
Standard test condition	25℃,1.5AM,1000W/M2
Maximum system voltage	1000VDC
Maximum fuse rating	10A
Maximum reverse current	10A
Working temperature	-40～60℃
Frontal maximum static load	5400Pa
Back maximum static Load	2400Pa
Glass	Low iron suede toughened glass, thickness 3.2mm
Solar cells	Polycrystalline 156 * 156mm, three-line or two-line
Packaging materials	EVA
Frame	Anodized aluminum / silver white
Junction box	IP65
Cable	4mm^2 Optional length
Connector	MC4/IP67 Optional

www.joysolar.com

PRODUCT DESCRIPTION

1. Efficient polycrystalline cells and highly transparent toughened glass are the effective guarantee for the conversion efficiency of solar panels, which not only reduce the installation cost of photovoltaic power system, but also increase the system capacity per unit area.

2. Solar panel's power tolerance of ± 3% guarantees the power of solar panel received by the customer, reduces the power loss caused by the mismatch of power and improves the system output performance so as to bring customers more benefits.

3. It passed TUV certification and the actual production keeps highly consistent with the certification and testing standards.

4. 5-year product warranty, no less than 90% of the nominal output power for 10 years, no less than 80% of the nominal output power for 25 years.

PRODUCT COMPOSITION

Solar panels are made of monocrystalline or polycrystalline silicon solar cells connected in series-paralle and hot sealed with toughened glass, EVA and TPT and equipped with aluminum alloy frame. It has the characteristics of wind resistance, strong hail resistance, easy installation, etc. and is widely used in solar lighting, lamps and lanterns, household electricity supply, highway transportation, construction, photovoltaic power plants and other fields.

1. Toughened glass

Low-iron toughened glass (also known as white glass) has common thickness of 3.2mm or 4mm, light transmission rate in the wavelength range of solar spectral response (320-1100NM) over 90% and higher reflectivity rate for infrared light of more than 1200NM. This glass also resists to ultraviolet radiation without reducing light transmittance. Toughened performance in line with the national standard GB9963-88, or after packaged can meet performance indicators specified in GB9535-88 Environmental test methods for ground silicon solar cells.

2. EVA

EVA is a hot melt adhesive with thickness between 0.4mm ~ 0.6mm, smooth surface, uniform thickness, containing a crosslinking agent. Not adhesive at room temperature and has resistance to bond. After a certain adjustment of chemical valence and hot press, it will melt, adhere, crosslink and solidify and become completely transparent. EVA cured can withstand atmospheric changes and become resilient. It envelopes the cells and is integrated with the upper protective layer of glass and the lower protective back material (TPT, BBF, etc.) using a vacuum laminating technology. On the other hand, after adhering to the glass, it can increase the light transmittance of the glass and improve the output of the solar panel.

www.joysolar.com

3. Solar cells

Solar cell is the minimum unit of the photoelectric conversion. Solar cell's operating voltage is about 0.5V. It generally can't be used alone as a power source. After putting the solar cells in series-parallel and packaged to become solar panels, its power is generally a few watts to 200 watts or more, so it, can be used alone as a power source.

4. Backboard

Backboard is the protective material for the back of the solar panels, generally made of TPT, BBF, DNP and so on. These protective materials have good resistance to environmental corrosion and insulation capability, and can be well bonded with EVA. The backboard's cover, the fluorine plastic film, is white, which can reflect the sun, so the efficiency of the solar panels is slightly improved, and thanks to its high infrared emissivity, it can also reduce the working temperature of the solar panels, which also improves the efficiency. The fluorine plastic film can meet the basic requirements of aging resistance, corrosion resistance, air tightness and so on for the packing of solar panels.

5. Junction Box

Junction box shell is generally made of ABS with anti-aging and anti-ultraviolet radiation agents, which can ensure that the solar panels be used outdoors for more than 25 years without aging fracture phenomena. The wiring terminal is made of the high conductivity copper with nickel plating on outside surface, which can ensure the reliability of the electric conduction and electrical connection. Junction box is sticked to the back surface with silicone adhesive.

6. Aluminum frame

The frame made of hard aluminum alloy with a surface oxide layer thicker than 10 microns can guarantee the use of more than 25 years in outdoor environment without corrosion, but keeping strong and durable.

www.joysolar.com

DIMENSIONS AND PACKING

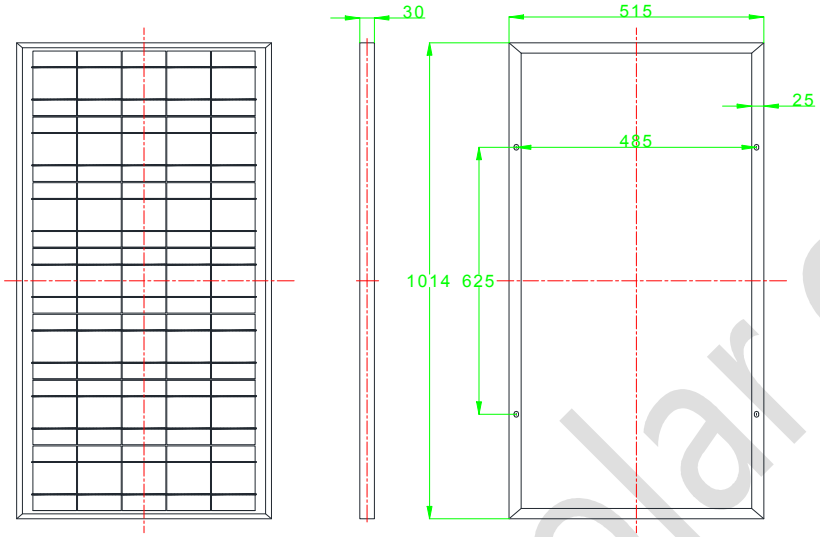

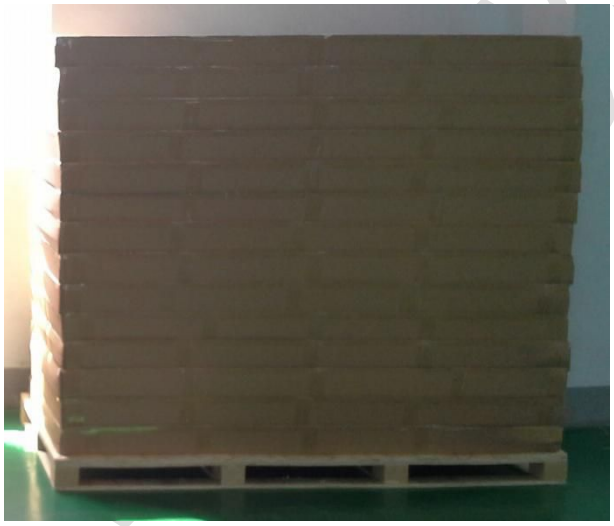

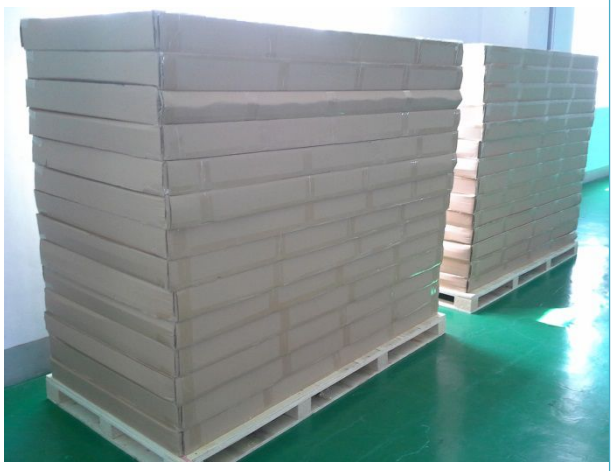

2 pieces/carton， Package size：1034×525×70mm Package weight：12.8KG

www.joysolar.com

TESTING INSTRUMENTS AND PRODUCTION EQUIPMENT

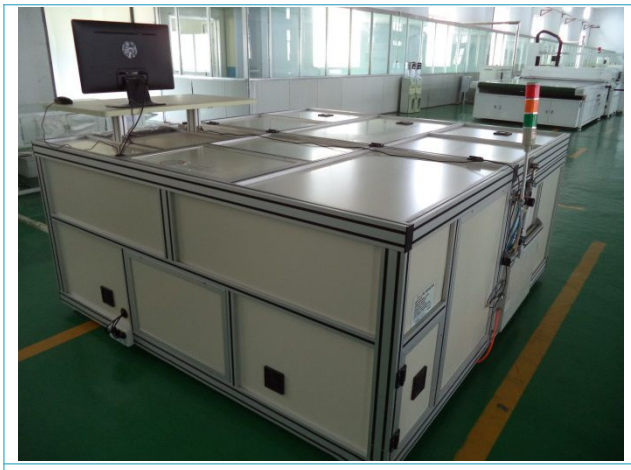	
EL Tester	Full-automatic laminating machine

www.joysolar.