For a Free Quote:
Web: **EnergyPal.com/solar**
Call: **1-800-990-3725**
Email: **contact@energypal.com**

Solar Panel Guide
Specification Data Sheet

Aventia Solar
ARGOS 250-270EP
AVN 260EP-60

Also available on the web at
EnergyPal.com/aventia-solar-solar-panels/avn-260ep-60

POLYCRYSTALLINE 250-270Wp

ARGOS

The robust all-rounder

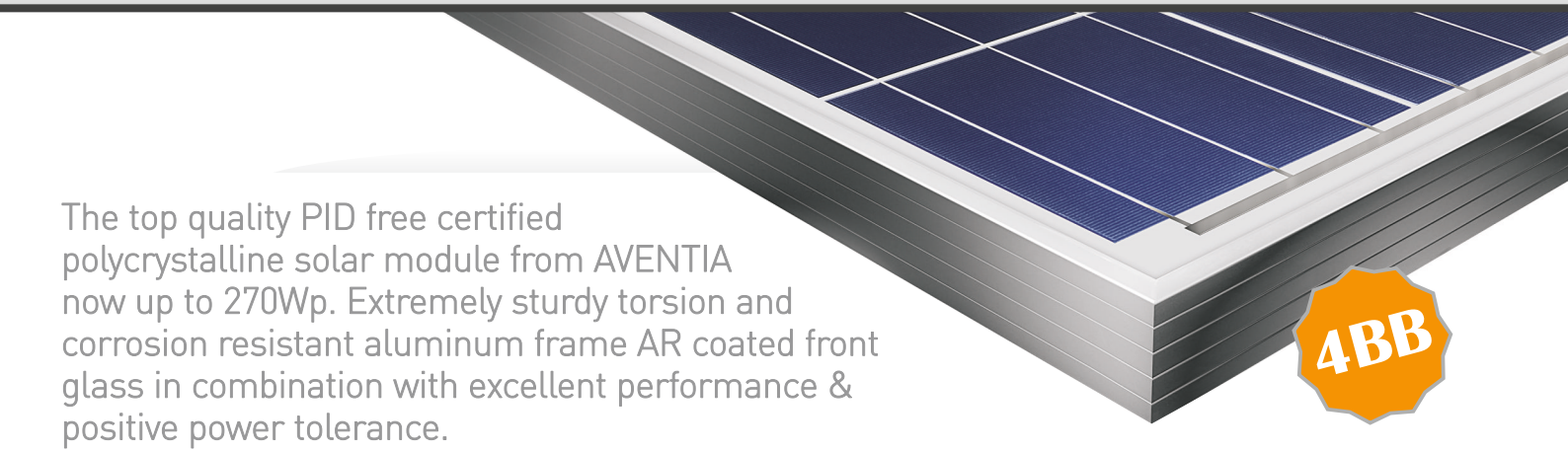

The top quality PID free certified polycrystalline solar module from AVENTIA now up to 270Wp. Extremely sturdy torsion and corrosion resistant aluminum frame AR coated front glass in combination with excellent performance & positive power tolerance.

Module Efficiency	Positive Power Tolerance	Linear Power Output Warranty	Product Quality Warranty
16.50%	0/+5W	25 Years	15 Years

Snow Load Parameters	Wind Load Parameters	Rated Junction Box	For Maximum Performance
5400 Pa	2400 Pa	IP 67	PID FREE

AVENTIA
PV SOLUTIONS

Electrical Characteristics

MODULE TYPE	AVN250EP-60	AVN255EP-60	AVN260EP-60	AVN265EP-60	AVN270EP-60
Open-Circuit Voltage (Voc)	38.00 V	38.30 V	38.40 V	38.50 V	38.40 V
Optimum Operating Voltage (Vmp)	30.80 V	31.20 V	31.40 V	31.50 V	31.60 V
Short-Circuit Current (Isc)	8.62 A	8.74 A	8.90 A	8.97 A	9.11 A
Optimum Operating Current (Imp)	8.14 A	8.23 A	8.36 A	8.43 A	8.76 A
Maximum Power at STC (Pmax)	250 W	255 W	260 W	265 W	270 W
Module Efficiency	15.27 %	15.58 %	15.88 %	16.19 %	16.50 %
Maximum Series Fuse Rating	15 A				
Operating Temperature	-40°C to +85°C				
Maximum System Voltage	1000 VDC				
Power Tolerance	0 to +5 W				

STC : Irradiance 1000 W/m^2. Module temperature 25 °C. AM=1.5

MECHANICAL CHARACTERISTICS

Type	Polycrystalline cell 156 x 156 mm
Cells Arrangement	6 x10 (60 pcs)
Module Dimensions	1650 x 992 x 40 mm
Weight	18.7 kg
Front Side	AR coated 3.2 mm Low Iron Tempered Glass
Frame	Anodized Aluminum Alloy
Junction Box	IP67 Rated, 3 by-pass diodes
Standard Packaging	26 pcs. 510 kg per pallet
Module pieces per container	728 pcs in 40 ft HC - 28 pallets

TEMPERATURE CHARACTERISTICS

Nominal Operating Cell Temperature (NOCT)	20°C ± 2°
Temperature Coefficient (Pmax)	-0.41 % / °C
Temperature Coefficient (Voc)	-0.31 % / °C
Temperature Coefficient (Isc)	0.05 % / °C

AVN250EP-60 ELECTRICAL PERFORMANCE

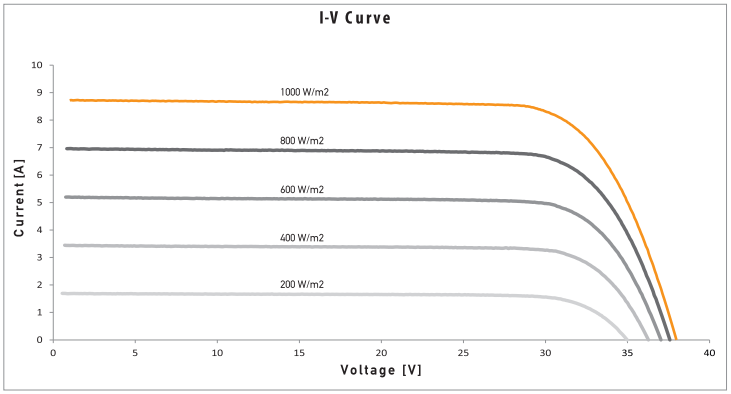

ENGINEERING DRAWING

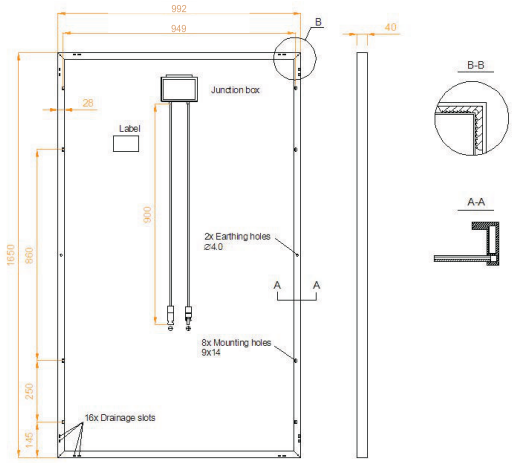

Design and specifications are subject to change.

ISO 9001:2008

P.I.D.

AVENTIA PV SOLUTIONS
info@aventiasolar.com | www.aventiasolar.com

Aventia Solar B.V.
Overschiestraat 184 1062 XK
Amsterdam, The Netherlands
Phone: + 31 20 80 86 197

Aventia Solar LTD
12 Monomatiou str.
136 77 Acharnes, Attica, Greece
Phone: + 30 211 01 25081