For a Free Quote:
Web: **EnergyPal.com/solar**
Call: **1-800-990-3725**
Email: **contact@energypal.com**

Solar Panel Guide
Specification Data Sheet

Wuxi Sunket New Energy Technology Co., Ltd.
SKT110-125M6-12
SKT120M6-12

Also available on the web at
EnergyPal.com/wuxi-sunket-new-energy-technology-co-ltd-solar-panels/skt120m6-12

SKT80~140M6-12 Customized 36Cells Monocrystalline PV Module

SUNKET® 萨科特

80~140 Watt

B *BLACK FRAME/BLACK BACK-SHEET PRODUCTS ARE AVAILABLE UPON REQUEST

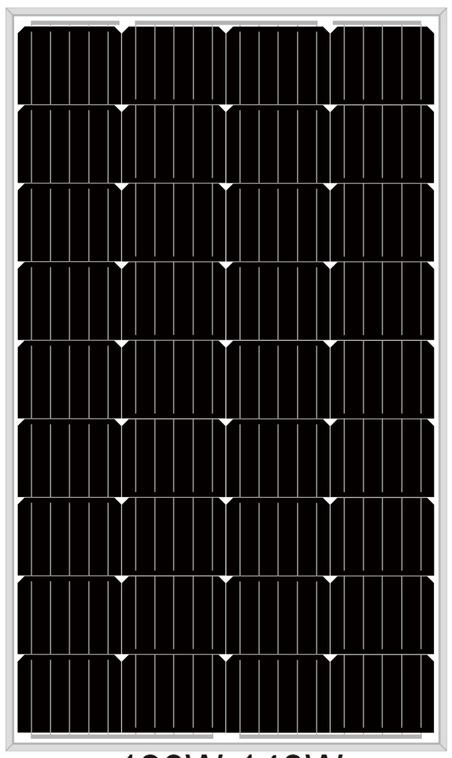

130W-140W

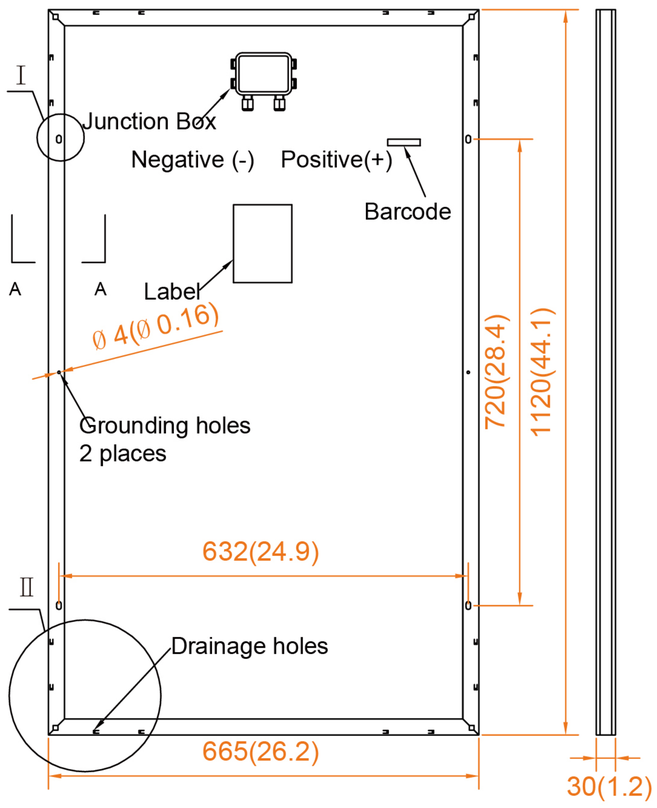

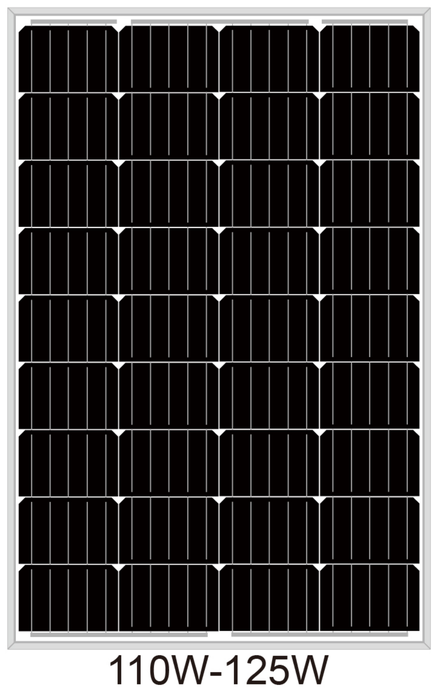

110W-125W

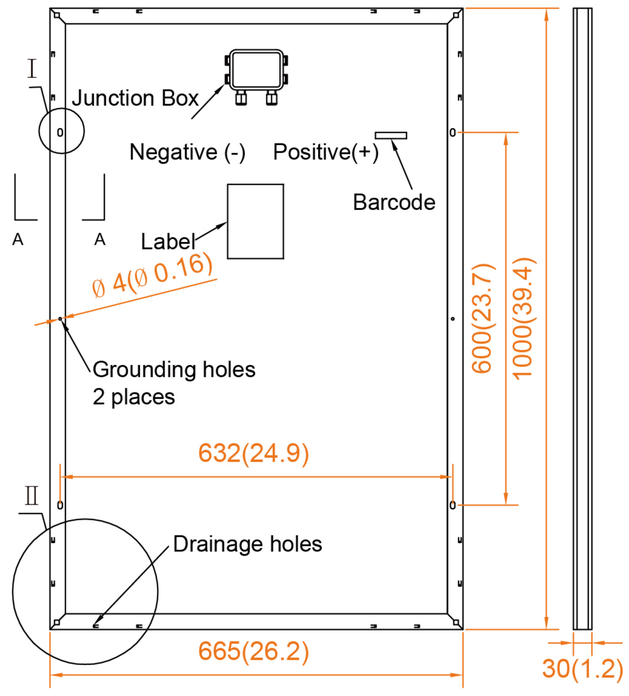

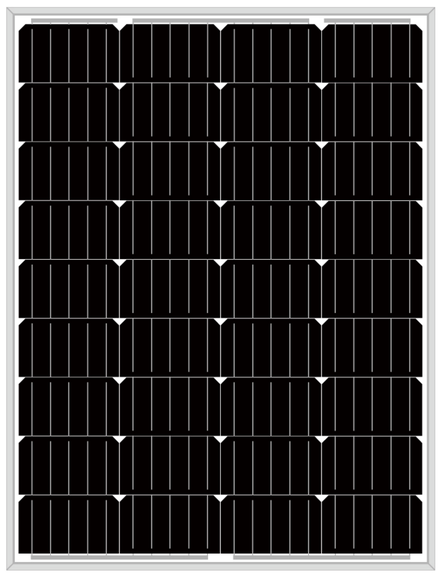

95W-105W

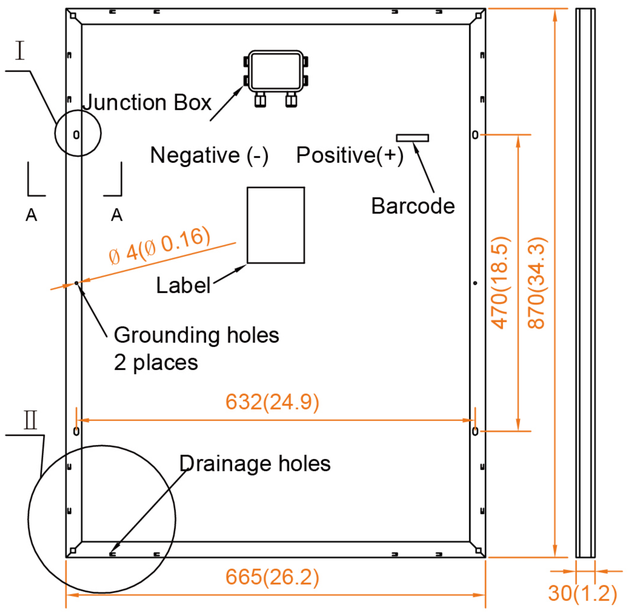

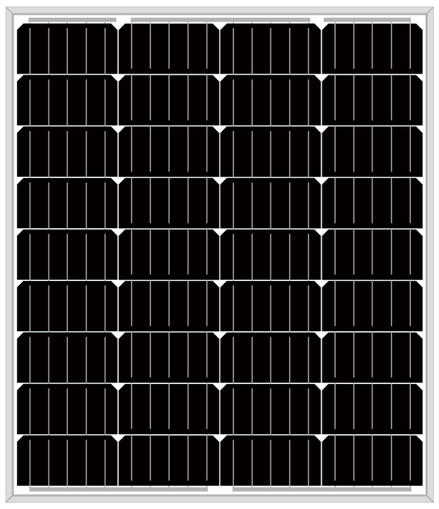

80W-90W

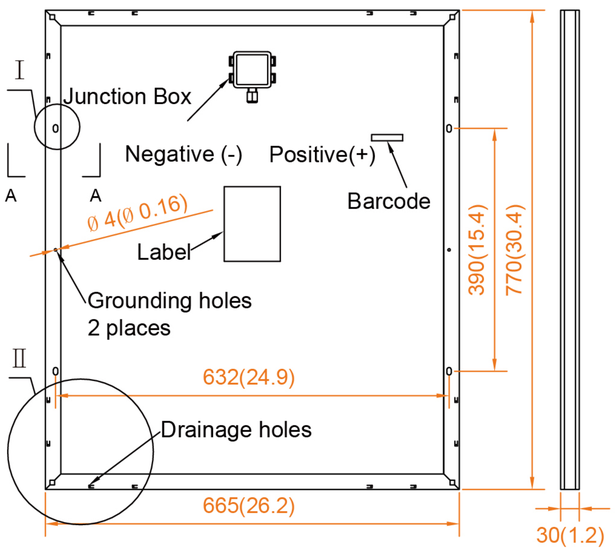

MANAGEMENT SYSTEM

- ISO 9001: Quality management system
- ISO 14001: Standard for environmental management system
- OHSAS 18001: International standard for occupational health and safety assessment system

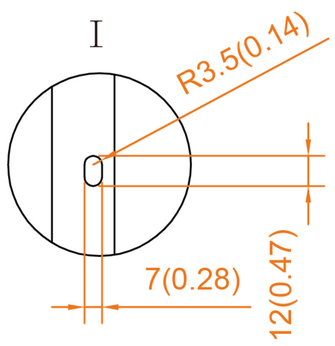

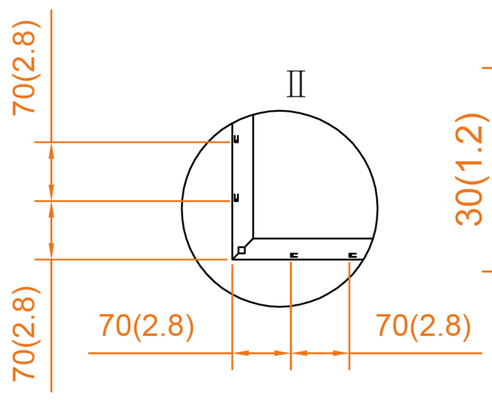

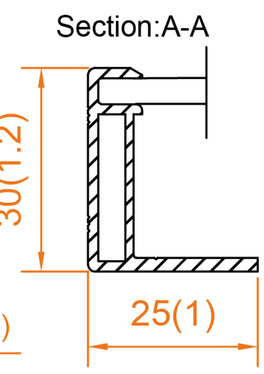

PRODUCT CERTIFICATES

IEC 61215 IEC 61730 Periodical Inspection

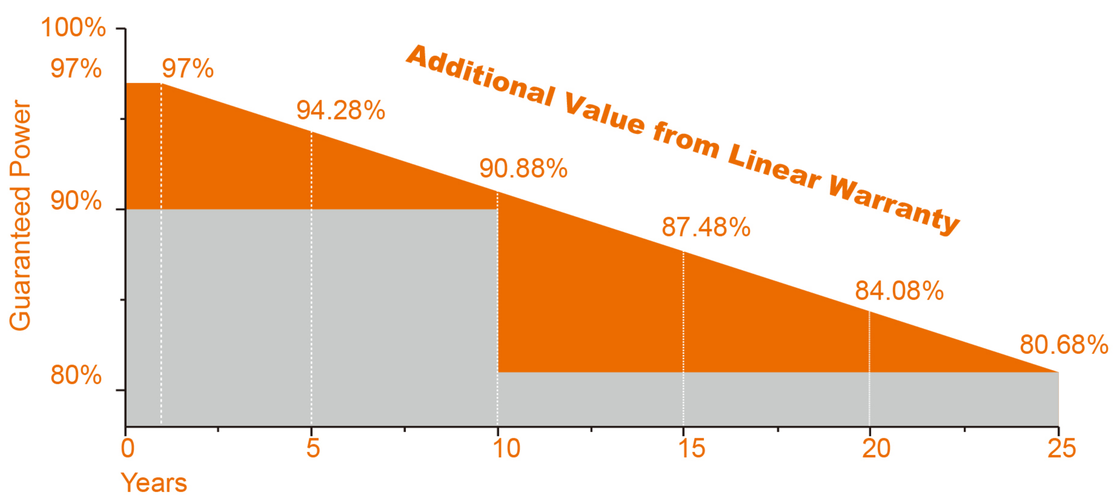

WARRANTY

- **5** Years — Material & Craft Quality assurance
- **10** Years — 90% Output Power guarantee
- **25** Years — 80% Output Power guarantee

Specifications are subject to change without further notification SKT-EN-2019V1.0 © Copyright 2019 Sunket

WUXI SUNKET NEW ENERGY TECHNOLOGY CO., LTD. www.sunket.cn sales@sunket.cn

NEW ENERGY·NEW WORLD

SKT80~140M6-12 Customized 36Cells Monocrystalline PV Module

Electrical Characteristics（STC）

Module Type	SKT80M6-12	SKT85M6-12	SKT90M6-12	SKT95M6-12	SKT100M6-12	SKT105M6-12	SKT110M6-12
Maximum Power- Pmax(W)	80	85	90	95	100	105	110
Open Circuit Voltage - Voc(V)	22.8	22.4	22.6	22.8	22.6	22.7	22.8
Short- Circuit Current - Isc(A)	4.65	5.04	5.28	5.52	5.87	6.13	6.39
Voltage at Pmax -Vmp(V)	18.6	18.2	18.4	18.6	18.4	18.5	18.6
Current at Pmax - Imp(A)	4.30	4.67	4.89	5.11	5.43	5.68	5.91
Module Efficiency -ηm（%）	15.62	14.69	15.56	16.42	15.04	15.79	16.54

Module Type	SKT115M6-12	SKT120M6-12	SKT125M6-12	SKT130M6-12	SKT135M6-12	SKT140M6-12
Maximum Power- Pmax(W)	115	120	125	130	135	140
Open Circuit Voltage - Voc(V)	22.6	22.8	23.1	23.4	22.7	22.9
Short- Circuit Current - Isc(A)	6.75	6.97	7.18	7.43	7.88	8.13
Voltage at Pmax -Vmp(V)	18.4	18.6	18.8	18.9	18.5	18.6
Current at Pmax - Imp(A)	6.25	6.45	6.65	6.88	7.30	7.53
Module Efficiency -ηm（%）	15.44	16.11	16.78	17.45	15.77	16.36

STC: Irradiance 1000W/m², Cell Temperature 25℃, Air Mass 1.5
Power measurement tolerance:0~+3%

Mechanical Specifications

Module Type	SKT130~140M6-12	SKT110~125M6-12	SKT95~105M6-12	SKT80~90M6-12
Dimensions	1120×665×30mm	1000×665×30mm	870×665×30mm	770×665×30mm
Weight	8.4kg	7.5kg	6.5kg	5.7kg
Mono Solar Cells	117×156mm (36pcs)	104×156mm (36pcs)	90×156mm (36pcs)	78×156mm (36pcs)
Front Glass	3.2 mm tempered, low iron	3.2 mm tempered, low iron	3.2 mm tempered, low iron	3.2 mm tempered, low iron
Frame	Anodized aluminum alloy	Anodized aluminum alloy	Anodized aluminum alloy	Anodized aluminum alloy
Junction Box	IP67	IP67	IP67	IP67
Mechanical Load	5400 Pa	5400 Pa	5400 Pa	5400 Pa

Packing Configuration

Module Type	SKT130~140M6-12	SKT110~125M6-12	SKT95~105M6-12	SKT80~90M6-12
Carton Dimensions	1135×680×175mm	1015×680×175mm	885×680×175 mm	785×680×175 mm
Pallet Dimensions	1400×1150×2170mm	1400×1100×2160mm	1800×1100×2170mm	1600×1100×2170mm
Pallet Weight	1074kg	966kg	1264kg	1115kg
Pieces/Pallet	120(5pcs/carton)	120(5pcs/carton)	180(5pcs/carton)	180(5pcs/carton)

I-V Curve（SKT100M6-12）

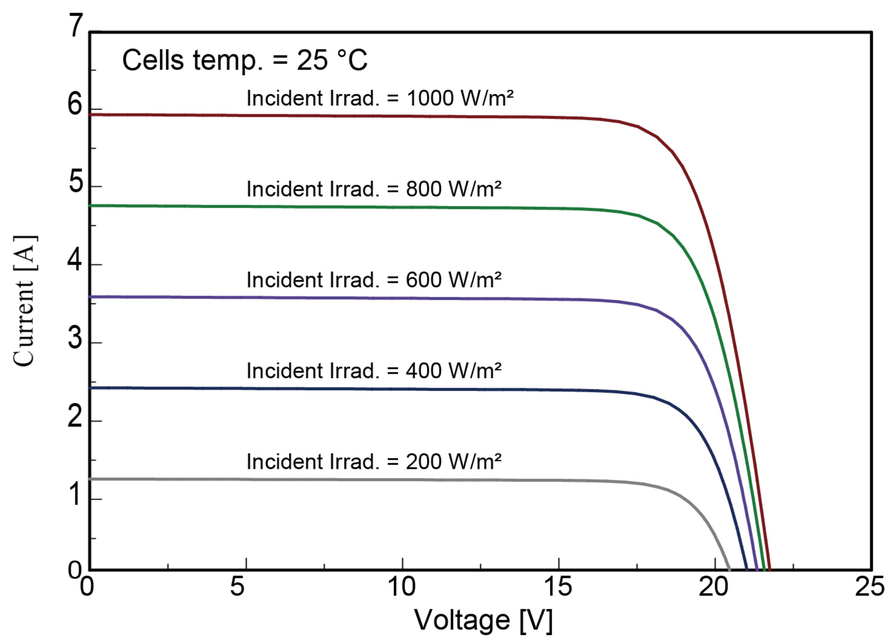

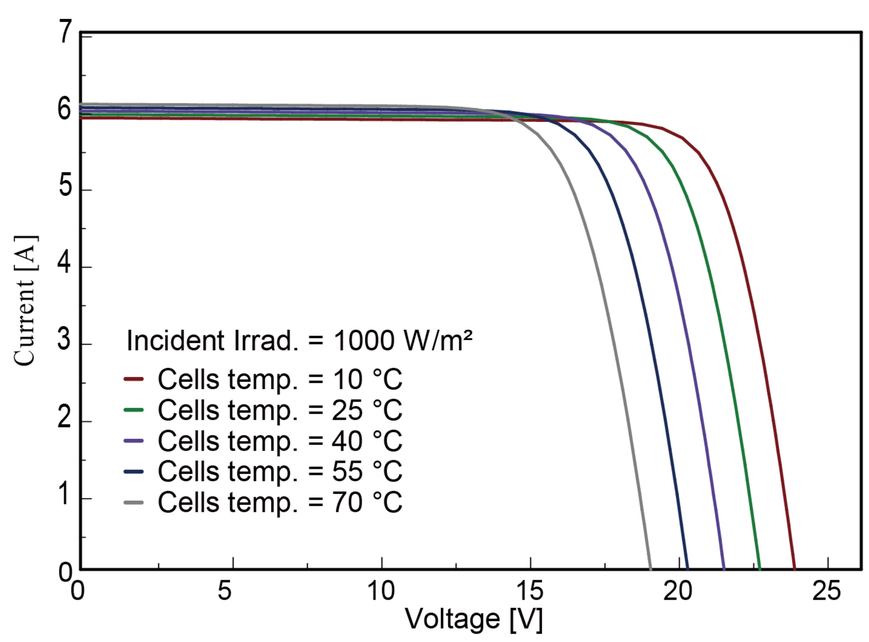

Specifications are subject to change without further notification SKT-EN-2019V1.0 © Copyright 2019 Sunket