For a Free Quote:
Web: **EnergyPal.com/solar**
Call: **1-800-990-3725**
Email: **contact@energypal.com**

Solar Panel Guide
Specification Data Sheet

Baoding Zhongtai New Energy Technology Co., Ltd.
ZTNE 36 Series 135-165W
ZT145

Also available on the web at
EnergyPal.com/baoding-zhongtai-new-energy-technology-co-ltd-solar-panels/zt145

ZTNE 36 SERIES

Electric performance par

The electrical paramenters of standard test conditions								
Name of component			ZT165					
Component specification			ZT165P-36/1-17b					
Peak power	P_{max}	W	135	145	150	155	160	165
Power tolerance	ΔP_{max}	W	±3					
Module efficiency	η_m	%	13.5	14.5	15.0	15.5	16.0	16.5
Peak power voltage	V_{mpp}	V	16.90	17.90	18.40	18.90	19.40	19.90
Peak power current	I_{mpp}	A	7.99	8.10	8.15	8.20	8.25	8.29
Open circuit voltage	V_{oc}	V	22.10	22.70	23.10	23.40	23.70	24.00
Short circuit current	I_{sc}	A	8.62	8.70	8.74	8.78	8.82	8.86

STC:Irradiance1000W/m², battery temperature25°C, atmospheric qualityAM1.5, according to EN60904-3

when the irradiance is 200W/m², the average efficiency loss by 5%, according to EN 60904-3.

Temperature coefficient

Nominal operating temperature	NOCT	°C	46 +/- 2
Temperature coefficients of (P_{max})	γ	%/°C	-0.45
Temperature coefficients of (V_{oc})	β_{Voc}	%/°C	-0.37
Temperature coefficients of (I_{sc})	αI_{sc}	%/°C	0.06

Operating conditions

Maximum system voltage	1000 V_{DC}
Largest fuse rating	15 A
Reverse current	The external voltage can not be greater than the open circuit voltage
Operating temperature	-45 ~ 85°C
Positive maximum static load(snow load and wind load)	5400 Pa
Back maximum static load(wind load)	2400 Pa
Hail test(hail diameter/impact speed)	25mm / 23m/s

Structural meterials

Glass(material/thickness)	Low iron tempered glass/3.2mm
Battery(quantity/kind/size)	36/Polycrystalline/1/1
Encapsulation(material)	EVA
Aluminum frame(material/color/color of anodic oxidation film)	Anodic oxidation aluminum/silver/transparency

- Because of the continuous innovation, research and product upgrade , the content in the product specification is usually possible to change without prior notice . These content, there may be a slight deviation and its content is not guaranteed.
- These data are not for single component, they are also not a part of the sales, they are only used for different types of components.

General features

Size(length/breadth/height)	1470mmx680mmx35mm
Weight	11.96kg

Packing specification

Number of component in each box	4
Packing size(length/breadth/height)	1490mmx700mmx180mm

Unit: mm

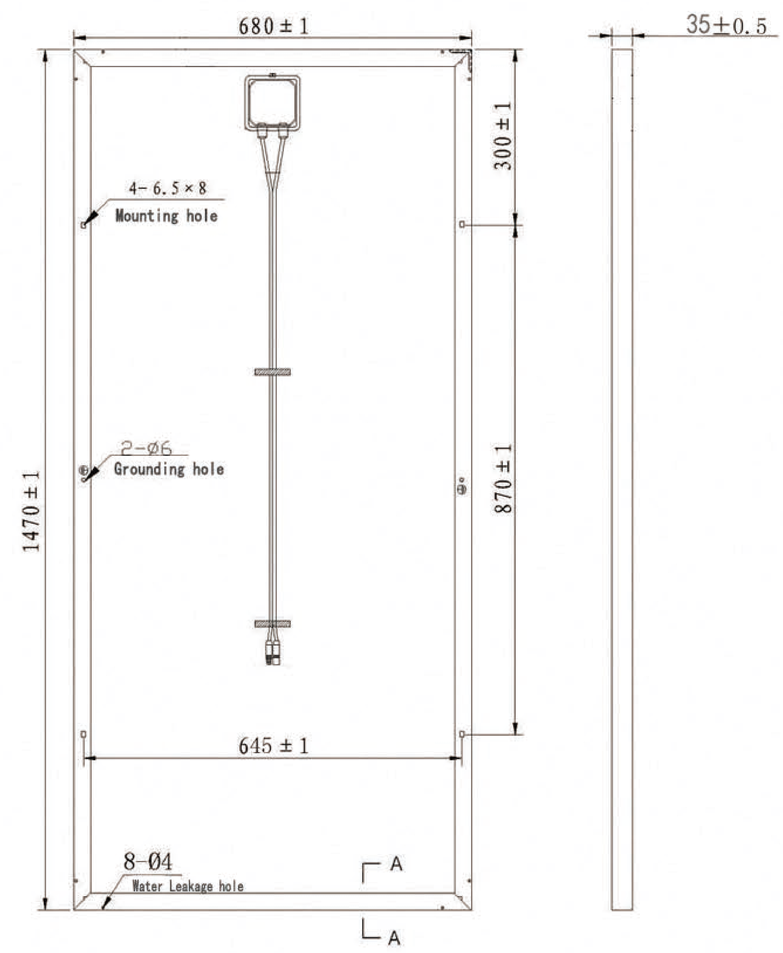

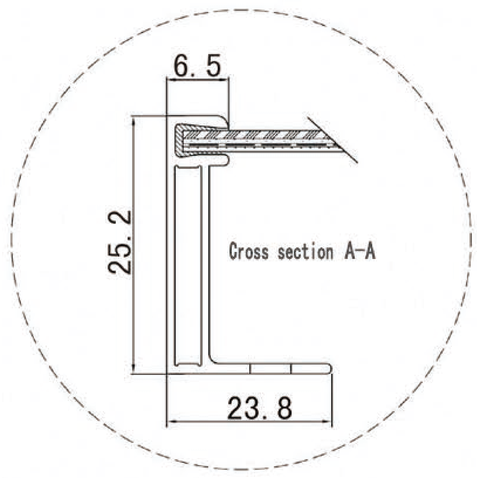

Warning:Before the operation to install and run zhongtai components, please first read carefully the installaton instruction.

BaoDing ZHONGTAI new energy technology co.,LTD
ADD:Hi-tech industrial park,North Yongsheng Street,Baoding,Hebei,China
E-mail:2755189147@qq.com
Internet:ZTSOLARKJ.COM
Tel:0312-5399693/5396622
Fax:0312-5399601

中泰 ZHONG TAI

SOLAR PRODUCT CERTIFICATION CQC CHINA QUALITY CERTIFICATION CENTRE

CE