For a Free Quote:
Web: **EnergyPal.com/solar**
Call: **1-800-990-3725**
Email: **contact@energypal.com**

Solar Panel Guide
Specification Data Sheet

Baoding Zhongtai New Energy Technology Co., Ltd.
ZTNE 60 Series 255-275W
ZT275

Also available on the web at
EnergyPal.com/baoding-zhongtai-new-energy-technology-co-ltd-solar-panels/zt275

ZTNE 60 SERIES

Electric performance parameters

The electrical paramenters of standard test conditions							
Name of component			ZT275				
Component specification			ZT275P-60/1-29b				
Peak power	P_{max}	W	255	260	265	270	275
Power tolerance	ΔP_{max}	W	0/+5				
Module efficiency	η_m	%	15.61	15.91	16.22	16.52	16.83
Peak power voltage	V_{mpp}	V	30.8	31.1	31.4	31.7	32.0
Peak power current	I_{mpp}	A	8.28	8.37	8.44	8.52	8.61
Open circuit voltage	V_{oc}	V	38	38.1	38.6	38.8	39.1
Short circuit current	I_{sc}	A	8.92	8.98	9.03	9.09	9.15

STC: Irradiance1000W/m², battery temperature25°C, atmospheric qualityAM1.5, according to EN60904-3

when the irradiance is 200W/m², the average efficiency loss by 5%, according to EN 60904-3.

Temperature coefficient

Nominal operating temperature	NOCT	°C	46 +/- 2
Temperature coefficients of (P_{max})	γ	%/°C	-0.45
Temperature coefficients of (V_{oc})	β_{Voc}	%/°C	-0.37
Temperature coefficients of (I_{sc})	αI_{sc}	%/°C	0.06

Operating conditions

Maximum system voltage	1000 V_{DC}
Largest fuse rating	15 A
Reverse current	The external voltage can not be greater than the open circuit voltage
Operating temperature	-45 ~ 85°C
Positive maximum static load(snow load and wind load)	5400 Pa
Back maximum static load(wind load)	2400 Pa
Hail test(hail diameter/impact speed)	25mm / 23m/s

Structural meterials

Glass(material/thickness)	Low iron tempered glass/3.2mm
Battery(quantity/kind/size)	60/Polycrystalline/1/1
Encapsulation(material)	EVA
Aluminum frame(material/color/color of anodic oxidation film)	Anodic oxidation aluminum/silver/transparency

- Because of the continuous innovation, research and product upgrade , the content in the product specification is usually possible to change without prior notice . These content, there may be a slight deviation and its content is not guaranteed.
- These data are not for single component, they are also not a part of the sales, they are only used for different types of components.

General features

Size(length/breadth/height)	1640mmx990mmx35mm
Weight	18.5kg

Packing specification

Number of component in each box	29
Packing size(length/breadth/height)	1700mmx1135mmx1165mm

Unit: mm

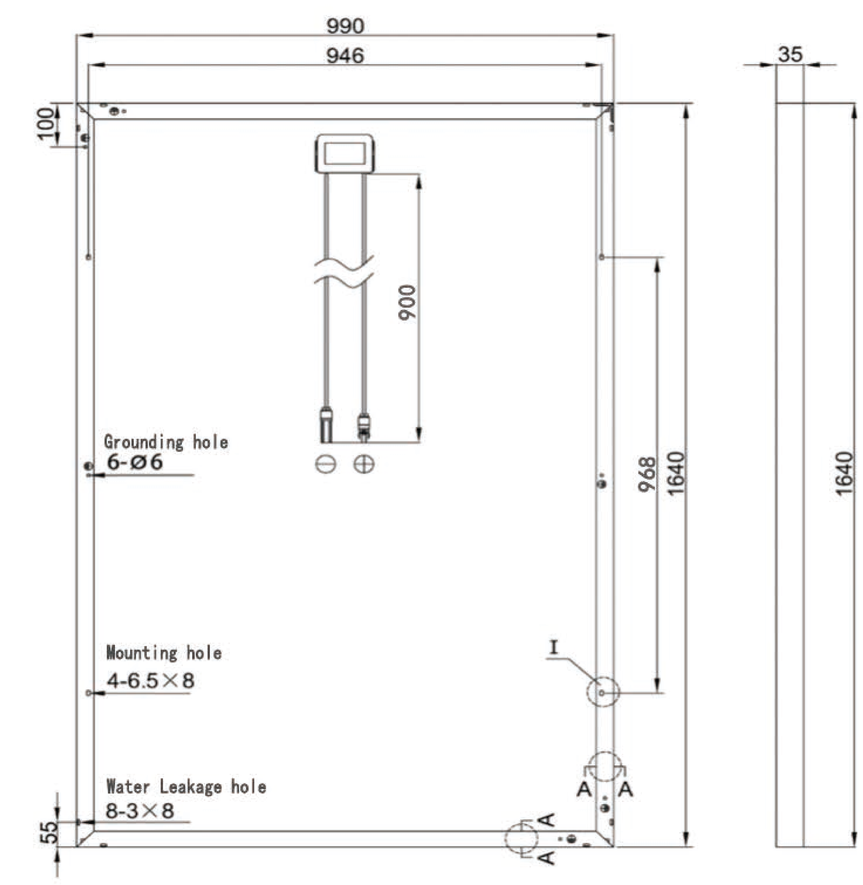

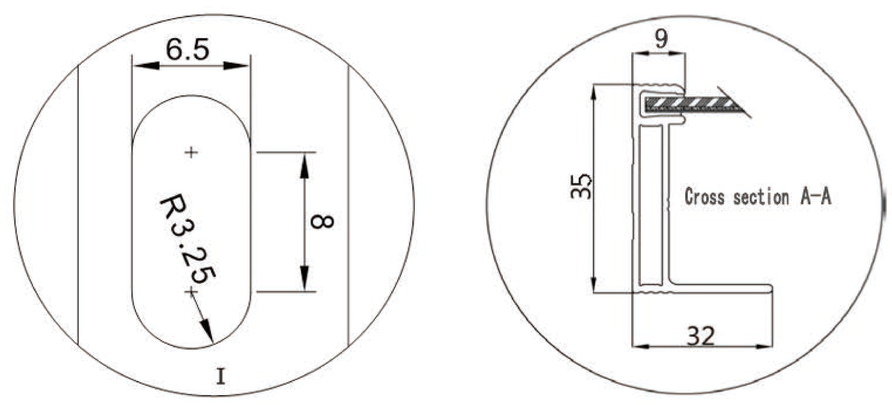

Warning:Before the operation to install and run zhongtai components, please first read carefully the installaton instruction.

BaoDing ZHONGTAI new energy technology co.,LTD
ADD: Hi-tech industrial park, North Yongsheng Street, Baoding, Hebei, China
E-mail:2755189147@qq.com
Internet:ZTSOLARKJ.COM
Tel:0312-5399693/5396622
Fax:0312-5399601

中泰
ZHONG TAI

SOLAR PRODUCT CERTIFICATION
CQC
CHINA QUALITY CERTIFICATION CENTRE

CE