**For a Free Quote:**
Web: **EnergyPal.com/solar**
Call: **1-800-990-3725**
Email: **contact@energypal.com**

# Solar Panel Guide
# Specification Data Sheet

## Baoding Zhongtai New Energy Technology Co., Ltd.
## ZTNE 72 Series 300-330W
## ZT300

Also available on the web at
EnergyPal.com/baoding-zhongtai-new-energy-technology-co-ltd-solar-panels/zt300

# ZTNE 72 SERIES

## Electric performance parameters

| The electrical paramenters of standard test conditions | | | | | | | | | |
|---|---|---|---|---|---|---|---|---|---|
| Name of component | | | ZT330 | | | | | | |
| Component specification | | | ZT330P-72/1-35b | | | | | | |
| Peak power | $P_{max}$ | W | 300 | 305 | 310 | 315 | 320 | 325 | 330 |
| Power tolerance | $\Delta P_{max}$ | W | 0/+5 | | | | | | |
| Module efficiency | $\eta_m$ | % | 15.46 | 15.71 | 15.97 | 16.23 | 16.49 | 16.74 | 17.0 |
| Peak power voltage | $V_{mpp}$ | V | 36.6 | 36.8 | 37.0 | 37.2 | 37.4 | 37.6 | 37.8 |
| Peak power current | $I_{mpp}$ | A | 8.2 | 8.3 | 8.38 | 8.48 | 8.56 | 8.66 | 8.74 |
| Open circuit voltage | $V_{oc}$ | V | 45.3 | 45.6 | 45.9 | 46.2 | 46.4 | 46.7 | 46.9 |
| Short circuit current | $I_{sc}$ | A | 8.84 | 8.91 | 8.96 | 9.01 | 9.05 | 9.10 | 9.14 |

STC: Irradiance1000W/m², battery temperature25°C, atmospheric qualityAM1.5, according to EN60904-3

when the irradiance is 200W/m², the average efficiency loss by 5%, according to EN 60904-3.

## Temperature coefficient

| | | | |
|---|---|---|---|
| Nominal operating temperature | NOCT | °C | 46 +/- 2 |
| Temperature coefficients of ($P_{max}$) | γ | %/°C | -0.45 |
| Temperature coefficients of ($V_{oc}$) | $\beta_{Voc}$ | %/°C | -0.37 |
| Temperature coefficients of ($I_{sc}$) | $\alpha I_{sc}$ | %/°C | 0.06 |

## Operating conditions

| | |
|---|---|
| Maximum system voltage | 1000 $V_{DC}$ |
| Largest fuse rating | 15 A |
| Reverse current | The external voltage can not be greater than the open circuit voltage |
| Operating temperature | -45 ~ 85°C |
| Positive maximum static load(snow load and wind load) | 5400 Pa |
| Back maximum static load(wind load) | 2400 Pa |
| Hail test(hail diameter/impact speed) | 25mm / 23m/s |

## Structural meterials

| | |
|---|---|
| Glass(material/thickness) | Low iron tempered glass/3.2mm |
| Battery(quantity/kind/size) | 72/Polycrystalline/ 1/1 |
| Encapsulation(material) | EVA |
| Aluminum frame(material/color/color of anodic oxidation film) | Anodic oxidation aluminum/silver/transparency |

- Because of the continuous innovation, research and product upgrade , the content in the product specification is usually possible to change without prior notice . These content, there may be a slight deviation and its content is not guaranteed.
- These data are not for single component, they are also not a part of the sales, they are only used for different types of components.

## General features

| | |
|---|---|
| Size(length/breadth/height) | 1960mmx990mmx40mm |
| Weight | 25.5kg |

## Packing specification

| | |
|---|---|
| Number of component in each box | 26 |
| Packing size(length/breadth/height) | 1995mmx1145mmx1170mm |

Unit: mm

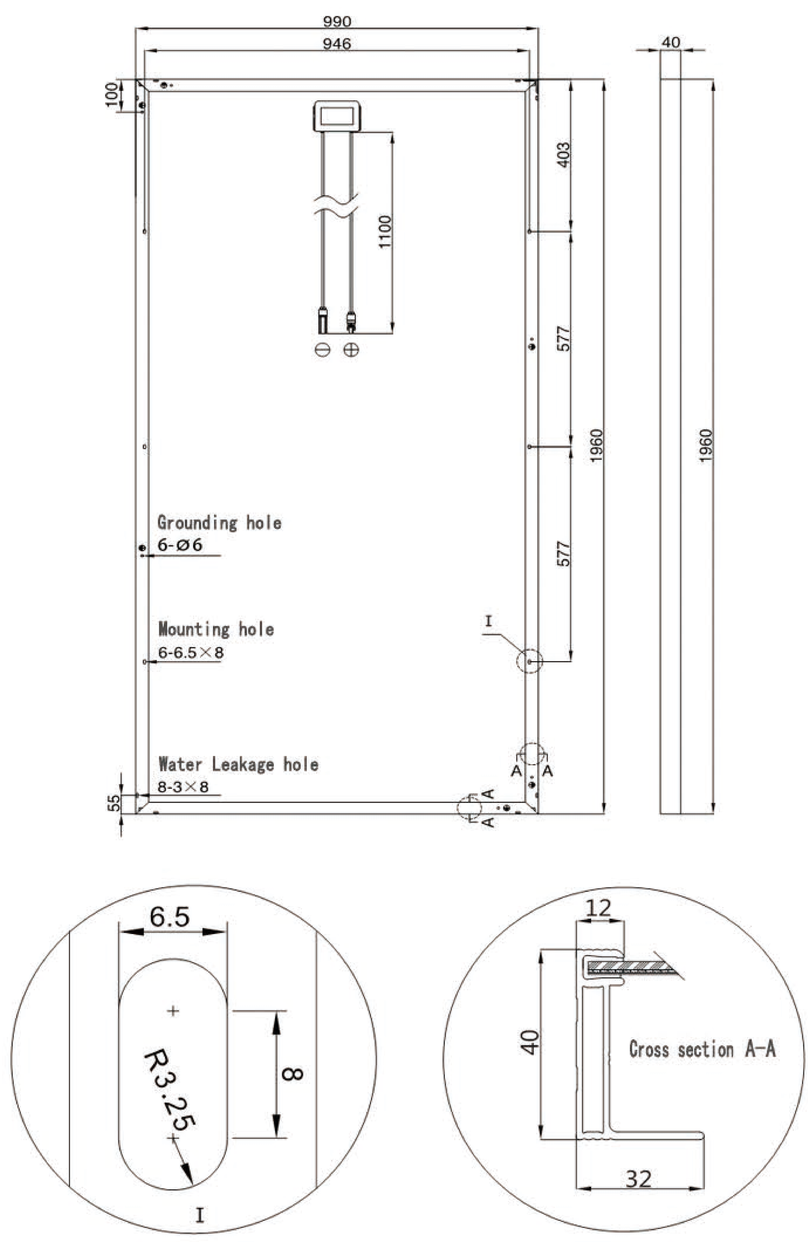


Warning:Before the operation to install and run zhongtai components, please first read carefully the installaton instruction.


BaoDing ZHONGTAI new energy technology co.,LTD
ADD: Hi-tech industrial park, North Yongsheng Street, Baoding, Hebei, China
E-mail:2755189147@qq.com
Internet:ZTSOLARKJ.COM
Tel:0312-5399693/5396622
Fax:0312-5399601


中泰
ZHONG TAI

SOLAR PRODUCT CERTIFICATION
CQC
CHINA QUALITY CERTIFICATION CENTRE

CE