For a Free Quote:
Web: **EnergyPal.com/solar**
Call: **1-800-990-3725**
Email: **contact@energypal.com**

Solar Panel Guide
Specification Data Sheet

Baoding Zhongtai New Energy Technology Co., Ltd.
ZTNE 72 Series 300-330W
ZT325

Also available on the web at
EnergyPal.com/baoding-zhongtai-new-energy-technology-co-ltd-solar-panels/zt325

ZTNE 72 SERIES

Electric performance parameters

The electrical paramenters of standard test conditions									
Name of component			ZT330						
Component specification			ZT330P-72/1-35b						
Peak power	P_{max}	W	300	305	310	315	320	325	330
Power tolerance	ΔP_{max}	W	0/+5						
Module efficiency	η_m	%	15.46	15.71	15.97	16.23	16.49	16.74	17.0
Peak power voltage	V_{mpp}	V	36.6	36.8	37.0	37.2	37.4	37.6	37.8
Peak power current	I_{mpp}	A	8.2	8.3	8.38	8.48	8.56	8.66	8.74
Open circuit voltage	V_{oc}	V	45.3	45.6	45.9	46.2	46.4	46.7	46.9
Short circuit current	I_{sc}	A	8.84	8.91	8.96	9.01	9.05	9.10	9.14

STC: Irradiance1000W/m², battery temperature25°C, atmospheric qualityAM1.5, according to EN60904-3

when the irradiance is 200W/m², the average efficiency loss by 5%, according to EN 60904-3.

Temperature coefficient

Nominal operating temperature	NOCT	°C	46 +/- 2
Temperature coefficients of (P_{max})	γ	%/°C	-0.45
Temperature coefficients of (V_{oc})	β_{Voc}	%/°C	-0.37
Temperature coefficients of (I_{sc})	αI_{sc}	%/°C	0.06

Operating conditions

Maximum system voltage	1000 V_{DC}
Largest fuse rating	15 A
Reverse current	The external voltage can not be greater than the open circuit voltage
Operating temperature	-45 ~ 85°C
Positive maximum static load(snow load and wind load)	5400 Pa
Back maximum static load(wind load)	2400 Pa
Hail test(hail diameter/impact speed)	25mm / 23m/s

Structural meterials

Glass(material/thickness)	Low iron tempered glass/3.2mm
Battery(quantity/kind/size)	72/Polycrystalline/ 1/1
Encapsulation(material)	EVA
Aluminum frame(material/color/color of anodic oxidation film)	Anodic oxidation aluminum/silver/transparency

- Because of the continuous innovation, research and product upgrade , the content in the product specification is usually possible to change without prior notice . These content, there may be a slight deviation and its content is not guaranteed.
- These data are not for single component, they are also not a part of the sales, they are only used for different types of components.

General features

Size(length/breadth/height)	1960mmx990mmx40mm
Weight	25.5kg

Packing specification

Number of component in each box	26
Packing size(length/breadth/height)	1995mmx1145mmx1170mm

Unit: mm

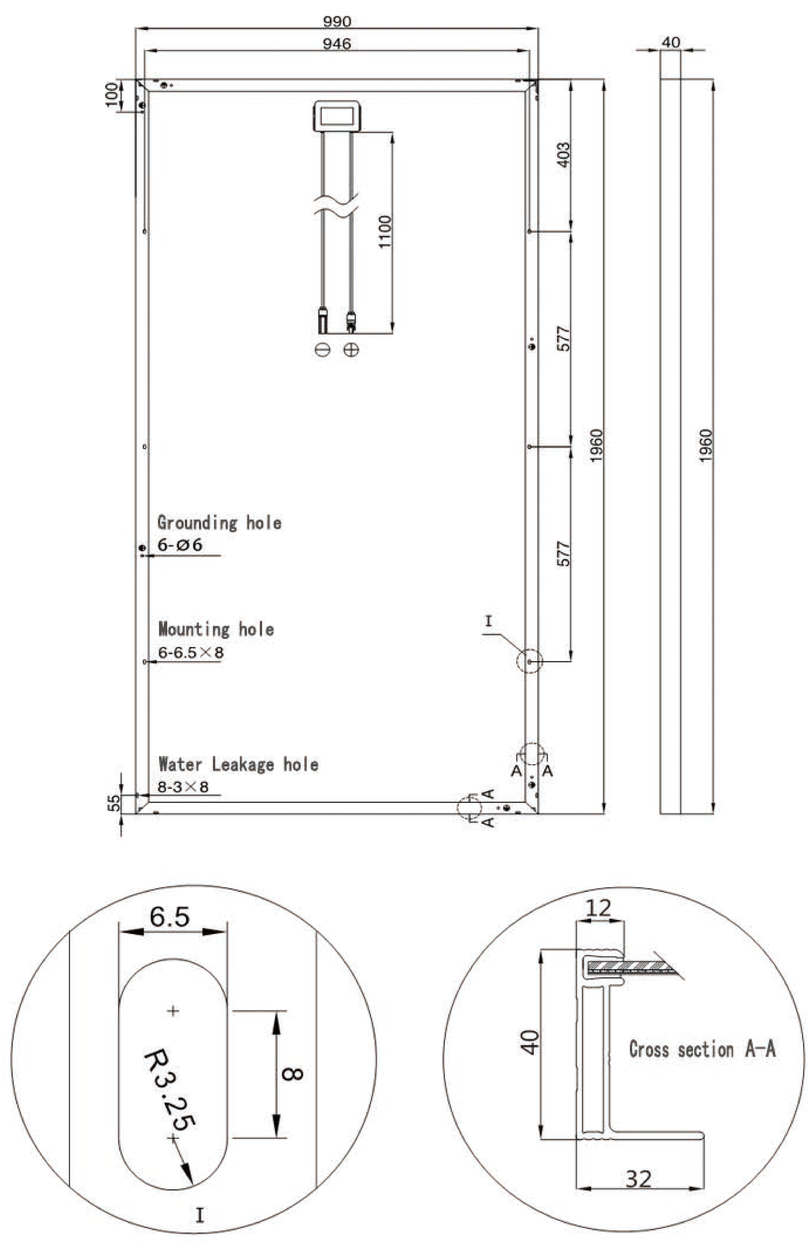

Warning:Before the operation to install and run zhongtai components, please first read carefully the installaton instruction.

BaoDing ZHONGTAI new energy technology co.,LTD
ADD: Hi-tech industrial park, North Yongsheng Street, Baoding, Hebei, China
E-mail:2755189147@qq.com
Internet:ZTSOLARKJ.COM
Tel:0312-5399693/5396622
Fax:0312-5399601

中泰
ZHONG TAI

SOLAR PRODUCT CERTIFICATION
CQC
CHINA QUALITY CERTIFICATION CENTRE

CE